MP Solutions

United States & Canada

Installation & User Manual

V15PWUW Quad-Sided Pop-Up Outlet

White gas-strut countertop outlet with USB and wireless charging



Hole	Maximum countertop	Clear below the countertop	Power cord
3 1/8"	3 5/16"	11"	6 ft
80 mm	85 mm	279 mm	1.85 m

Modern Power Solutions

Document	Version	Issued
MPS-UM-V15PWUW-US	2	October 22, 2026
Model	**Market**	**Support**
V15PWUW-US	US	contact@modernpower.solutions

Product page and latest manual

01

Before You Start

Check the fit and read the safety notes before you cut.

Will It Fit?

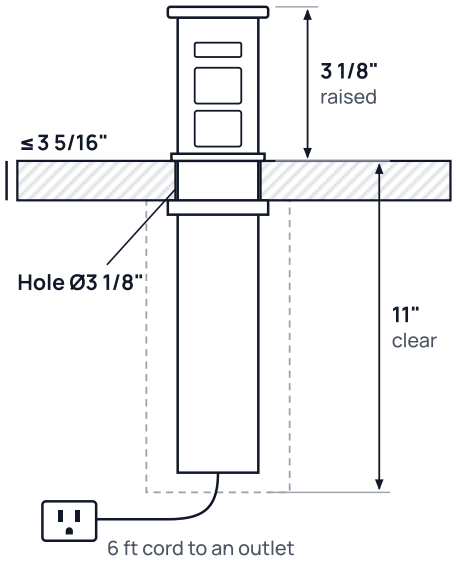

Inches. Not to scale: the full drawing is in Dimensions.

- ☐ **Hole: 3 1/8 in (80 mm)**
  Cut an 80 mm hole. The 3 5/8 in (92 mm) flange covers the edge.
- ☐ **Countertop: up to 3 5/16 in (85 mm) thick**
  The locking ring cannot grip a thicker countertop.
- ☐ **Below the countertop: 11 in (279 mm) clear**
  Measured down from the top surface. Keep drawers, shelves and pipes out of this space, and allow room for the cord to bend.
- ☐ **Power: a GFCI-protected outlet within 6 ft**
  The cord and US plug are fitted to the unit. Do not use an extension cord or adapter.

⚠ Safety

1. Read this manual fully before installing or using the product, and keep it for future reference.
2. Plug the unit only into a grounded, GFCI-protected 120V AC receptacle. Do not supply it through extension cords or adapters.
3. Any fixed wiring work must be performed by a licensed electrician in line with the NEC and local code.
4. Do not exceed the unit's rated load (on its label and in the specifications) in total across all receptacles.
5. Keep liquids away from the receptacles. Do not use the unit if liquid has entered it.
6. Do not open, modify or repair the unit. Stop using it if the cord, plug or housing is damaged, and contact us.
7. For indoor use in dry locations only (IP20). The unit is **not waterproof**: keep the raised unit and any connected plugs dry.
8. Remove every plug and cable before pushing the unit down, and keep fingers clear of the opening as it rises and closes.
9. Keep the 11 in (279 mm) space below the countertop free of shelves, drawers and pipes so the body can move freely.
10. Do not cut, shorten or modify the cord or plug.

02

Get to Know Your Product

White gas-strut countertop outlet with USB and wireless charging

A quad-sided pop-up outlet for kitchen and office countertops. Press the top and a gas strut lifts it 3 1/8 in (79 mm), giving you four US outlets, two USB-A and two USB-C ports. Push it down again and it retracts flush with the countertop.

The top is a 15 W Qi wireless charger. The unit plugs into a standard outlet below the countertop, so no hardwiring is needed.



1. **Wireless charging top**
   15 W Qi charging. Press to raise the unit; push down to retract it
2. **USB-A ports**
   Two, 5 V 3 A / 9 V 2 A / 12 V 1.5 A
3. **USB-C ports**
   Two, up to 20 W
4. **Four US outlets**
   One on each side, 15 A / 1,875 W in total
5. **Flange**
   3 5/8 in (92 mm). The locking ring, body and cord sit below the countertop

Features

Four US outlets
One on each side, 15 A / 1,875 W in total.

Two USB-A, two USB-C
USB-C up to 20 W for phones, tablets and accessories.

15 W wireless charging
Charge a Qi phone on the top.

Gas-strut lift
Press the top and it rises. Push it down and it sits flush with the countertop.

Plug-in install
6 ft cord with a fitted US plug. No hardwiring if there is an outlet under the countertop.

ETL Listed
Listed to UL 962A and CSA C22.2 No. 308 for the US and Canada.

Surge and overload protection
UL 1449 Type 3 surge protection (VPR 1,000 V) and a resettable overload breaker.

03 Dimensions

Measure your space against these figures before you cut.

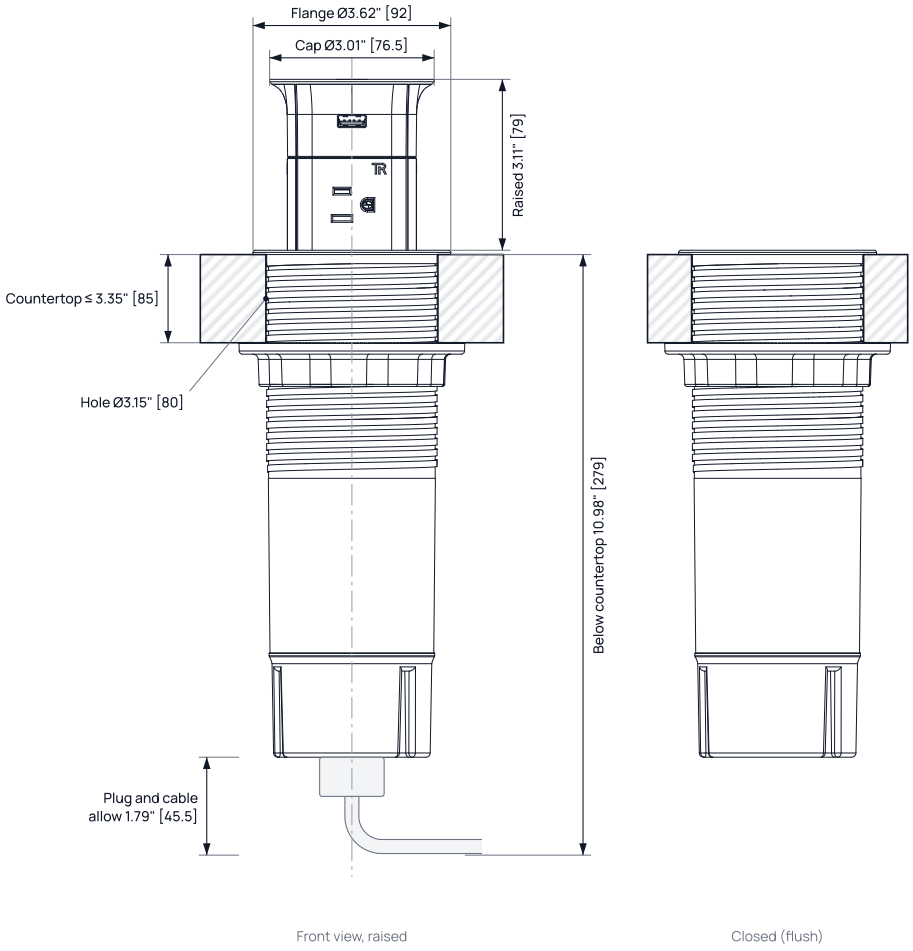

Drawing MPS-D-V15-USB-US, version 2.

Hole	**3.15" [80]**	Flange Ø	**3.62" [92]**
Countertop	**≤ 3.35" [85]**	Length closed	**9.29" [236]**
Below countertop	**10.98" [279]**	Length open	**12.40" [315]**
Raised	**3.11" [79]**	Cord	**6 ft [1.85 m]**

Electrical: Cord: fitted US plug · Outlets: 4 × US, 125 V AC, 15 A / 1,875 W max; resettable overload breaker · Surge protection: UL 1449 Type 3, VPR 1,000 V · USB: 2 × USB-A, 2 × USB-C up to 20 W; 15 W wireless charging top · ETL Listed (Intertek 5024136) to UL 962A and CSA C22.2 No. 308; IP20

04 Installation

Six steps. No electrician needed when there is an outlet below the countertop.

In the Box

- ☐ Quad-sided pop-up outlet, with the locking ring fitted
- ☐ 6 ft (1.85 m) cord with US plug, fitted to the unit

You Will Need

- Drill with an **80 mm (3 1/8 in) hole saw** suited to your countertop (a water-cooled diamond core bit for stone)
- Tape measure, pencil, masking tape and the template in this manual
- Safety glasses and a dust mask

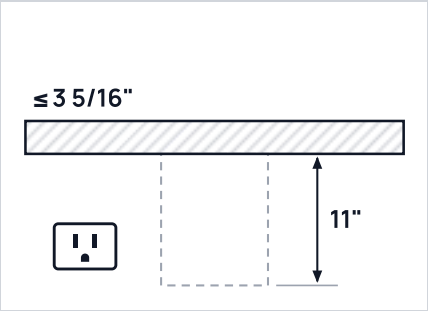

1 Check the space

Confirm the countertop is no thicker than 3 5/16 in (85 mm) and there is **11 in (279 mm) clear** below, with an outlet within reach of the cord.

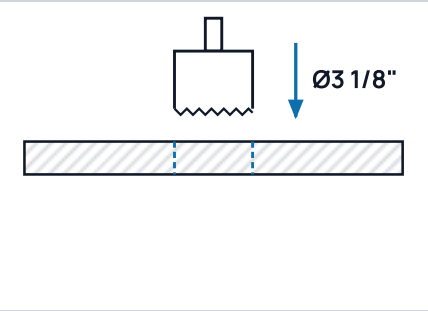

2 Mark and cut the hole

Tape the template in place, mark the center and cut an **80 mm (3 1/8 in) hole**. Clean up dust and sharp edges.

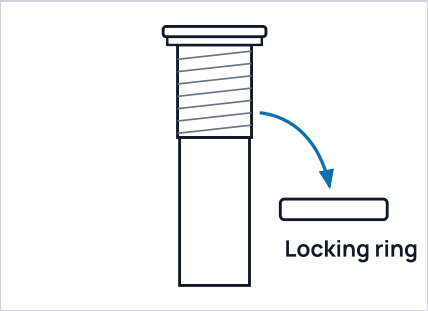

3 Remove the locking ring

Unscrew the locking ring from the body and set it aside.

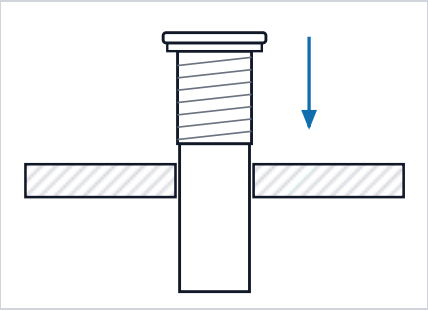

4 Lower the unit in

Feed the cord and body down through the hole until the flange sits flat on the countertop.

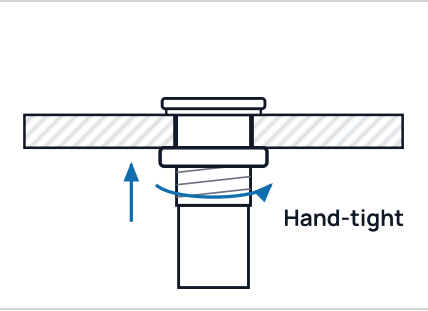

5 Tighten the locking ring

From under the countertop, screw the ring back up the body and tighten it securely against the underside.

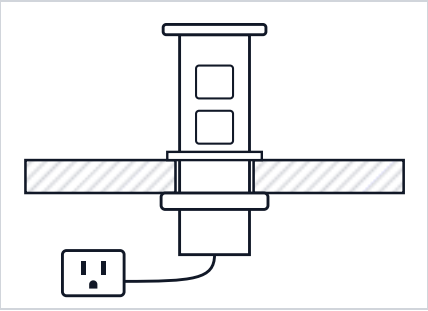

6 Plug in and test

Plug into the outlet under the countertop. Press the top to raise the unit and check the outlets, USB ports and charger.

Installation Tips

- It fits upright or sideways from a counter edge, but not upside down.

05 Cut-Out Template

Actual size. Print this page at **100% (Actual Size)** with page scaling turned off, and check the scale bar before you mark the countertop.

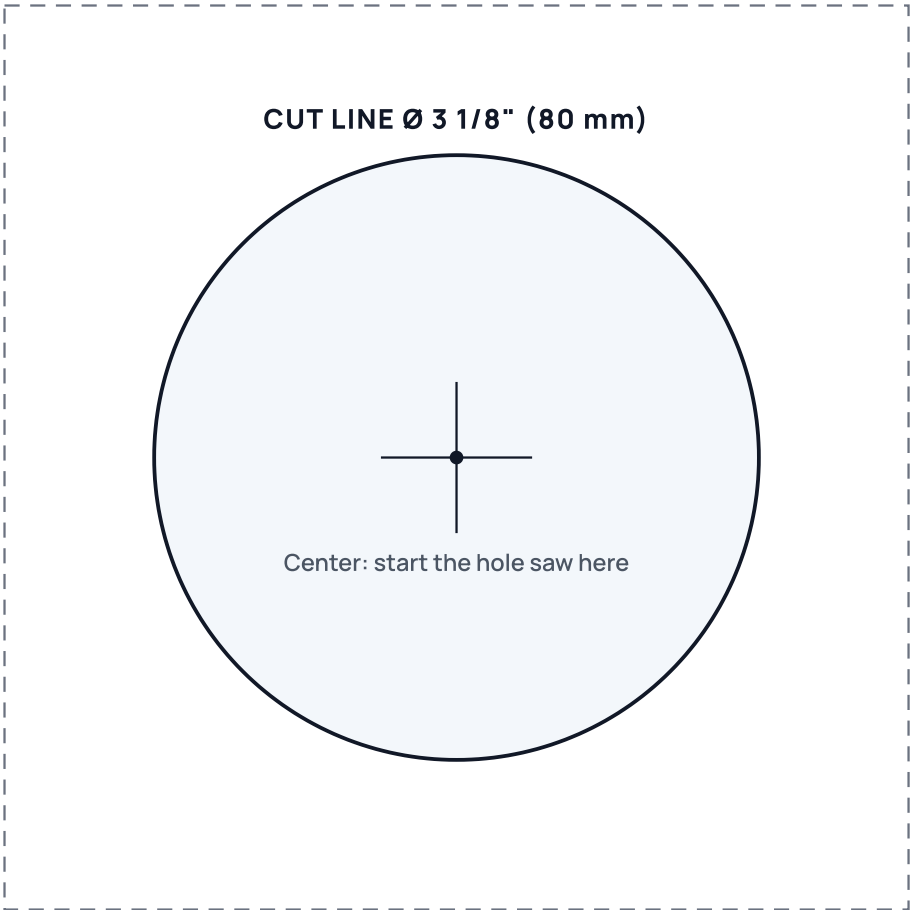

This bar must measure exactly 2 in (50.8 mm). If it does not, reprint with scaling turned off.

1. Cut along the dashed frame and tape the template where the unit will sit. Check the space below first.
2. Mark the center and trace the cut line.
3. Cut with a Ø 3 1/8" (80 mm) hole saw centered on the mark, or cut to the line.

The 92 mm flange covers the edge of the hole.

06 Using Your Product

Everyday operation.

1 Raise

Press the center of the top and let go. The gas strut lifts the unit **3 1/8 in (79 mm)** above the countertop.

2 Use

Plug into the outlets or USB ports, or charge a phone on the top. Keep the total load within 15 A (1,875 W).

3 Lower

Remove every plug and cable, then push the top straight down until the unit sits flush with the countertop.

Wireless Charging

Place a Qi phone in the center of the top. It charges at up to 15 W. If it does not start, take the phone out of a thick or metal case and center it again.

07 Care, Troubleshooting and FAQs

Keep it working like new.

Troubleshooting

Problem	What to do
The unit will not rise	Press firmly in the center of the top and let go. Check nothing is resting on the top or blocking the body under the countertop.
The unit will not go down	Remove every plug and cable, then push straight down in the center of the top. Check nothing under the countertop is in the way.
USB charging is slow	With USB-A and USB-C in use together, the ports share 5 V 3 A. Unplug other devices, and use a USB-C cable for fast charging.
My phone will not charge on the top	Remove the case, center the phone and check it supports Qi wireless charging. Remove cards or metal objects between the phone and the top.
The outlets have no power	Check the outlet under the countertop, reset its GFCI and check the breaker. If the cord, plug or outlets look damaged, stop using the unit and contact us.

Care and Cleaning

- Wipe the top and outlets with a soft, dry or slightly damp cloth. Do not use solvents, abrasives or spray cleaners.
- Lower the unit when you are not using it, and wipe up spills straight away. If liquid gets inside, unplug the unit and contact us.
- Now and then, check under the countertop that the cord is not pinched and the locking ring is still tight.

Frequently Asked Questions

Is this model spring-loaded?

It uses a gas strut. Press the top and it rises automatically; push it down to retract it.

Can it be installed upside down or sideways?

It can be installed upright or sideways. It is not designed for upside-down installation.

Do I need an electrician?

No hardwiring is needed if there is an outlet under the countertop: the unit plugs in with its fitted US plug. Adding a new outlet must be done by a licensed electrician.

Can I use it outdoors?

No. It is rated IP20 for indoor, dry locations only.

Is it certified?

Yes. It is ETL Listed by Intertek (control number 5024136) to UL 962A and CSA C22.2 No. 308 for the US and Canada.

How do I make a warranty claim?

Contact us within the warranty period and we will repair or replace the unit free of charge. We keep order records matched to your details, so you do not need to keep a paper receipt.

What if my unit develops a fault after the warranty ends?

We offer an affordable repair or replacement service for units outside the warranty period. Contact us with your order details and a description of the fault.

Do you provide after-sales support?

Yes. Email us or use the request-a-call-back option on our website, and we will get back to you as soon as possible.

08 Specifications

V15PWUW Quad-Sided Pop-Up Outlet

Electrical

Rated voltage	125 V AC, 60 Hz
Rated current	15 A (1,875 W) max
Receptacles	4 × US outlets, 2 × USB-A, 2 × USB-C
Cord	6 ft (1.85 m), fitted US plug
Lifting method	Gas strut
Operating temperature	32–104 °F (0–40 °C)
Surge protection	UL 1449 Type 3, VPR 1,000 V
Overload protection	Resettable overload breaker

Physical

Color	White
Materials	Polycarbonate (PC)
Flange diameter	3 5/8" (92 mm)
Ingress protection	IP20, indoor dry locations
Carton	6.9 × 13.8 × 5.9 in (17.5 × 35 × 15 cm), 3.5 lb (1.6 kg)
Warranty	24 months

Charging

USB-C	5 V 3 A / 9 V 2.22 A / 12 V 1.67 A (20 W max)
USB-A	5 V 3 A / 9 V 2 A / 12 V 1.5 A
USB-A and USB-C together	5 V 3 A max
USB charger input	125 V AC, 50/60 Hz, 0.5 A
Wireless	Qi, 15 W

Installation

Hole size	3 1/8" (80 mm)
Countertop thickness	Up to 3 5/16" (85 mm)
Clear space below surface	11" (279 mm), measured from the countertop top
Height when raised	3 1/8" (79 mm) above the countertop
Power supply	Grounded, GFCI-protected 120 V outlet within reach of the cord

Compliance and Certification

US & Canada	ETL Listed (Intertek control no. 5024136) to UL 962A and CSA C22.2 No. 308

09

Warranty and Support

We are here to help.

Warranty

Your unit is covered by a 24-month warranty from the date of purchase against defects in materials and workmanship.

- The warranty does not cover damage from incorrect installation, misuse, liquid entry, overloading or unauthorized repair.
- These benefits are in addition to your rights under the consumer law of your country.

Contact Us

Email	**contact@modernpower.solutions**
Web	**modernpower.solutions**

Support and call-back

Have your order number and the model on the product label ready.

Similar Products



V15PWUB-US

V15PWUB Quad-Sided Pop-Up Outlet

The same unit in black.



V15PW-US

V15PW Quad-Sided Pop-Up Outlet

Four outlets only, no USB or wireless charging. Needs 9 in below.



V3CW-US

V3CW Motorized Pop-Up Outlet

Motorized, with two outlets, USB and a Qi lid, for a 3 3/4 in hole.

About Modern Power Solutions

Modern Power Solutions designs and supplies retractable pop-up power outlets for kitchens, offices and commercial spaces. Founded in 2006, we focus on making power easy to reach and easy to hide, through careful product design, customer feedback and attention to detail.

Disclaimer

Modern Power Solutions has made every effort to make the information in this manual accurate. It is general guidance only and does not replace local electrical regulations or the advice of a qualified tradesperson. We may change the product or this information without notice. The rating label on your unit is the final reference for its electrical ratings.

© 2026 Modern Power Solutions. MPS-UM-V15PWUW-US, version 2, October 22, 2026. Models V15PWUW-US.